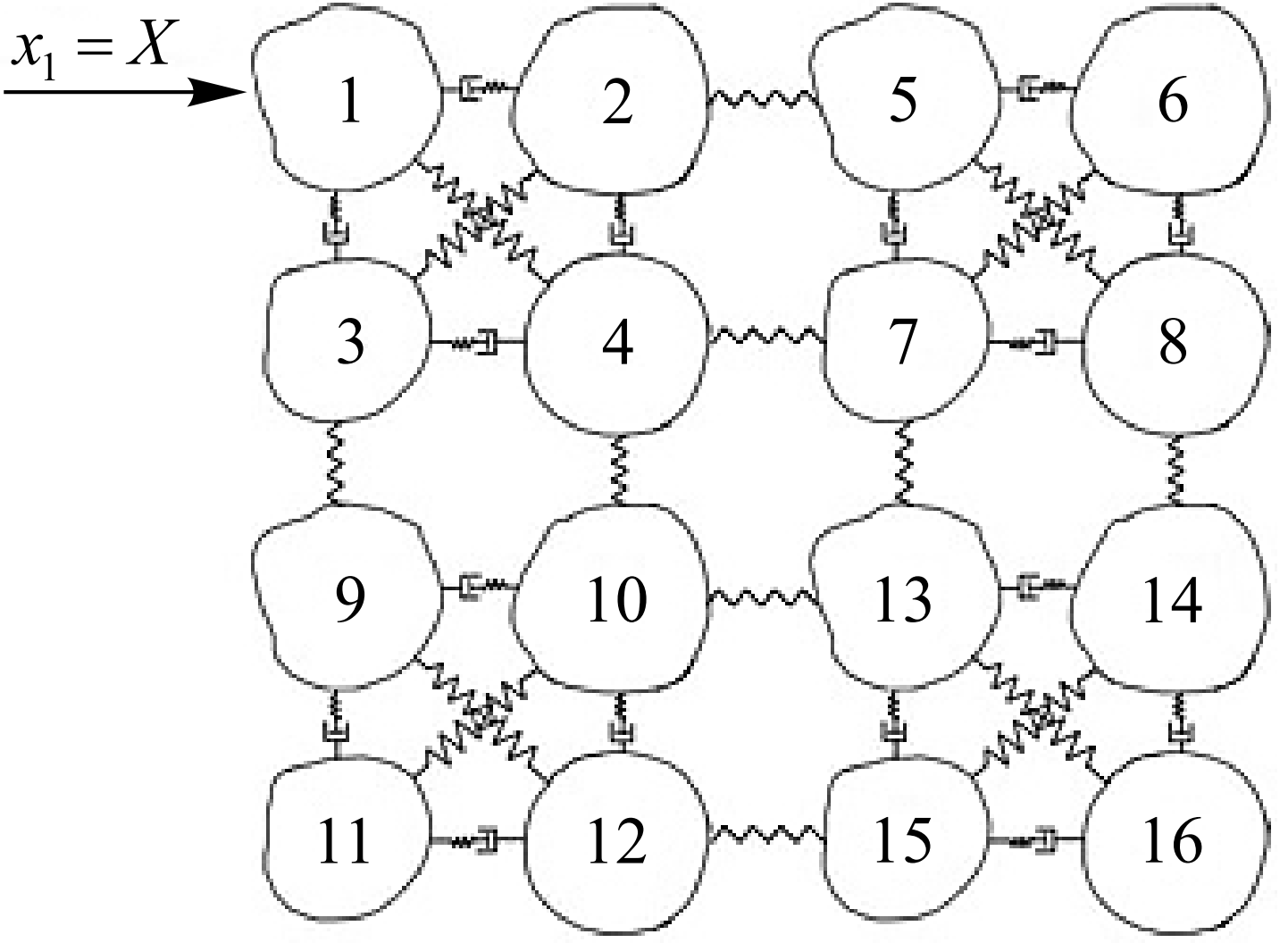

Fig. 6. The initial displacement