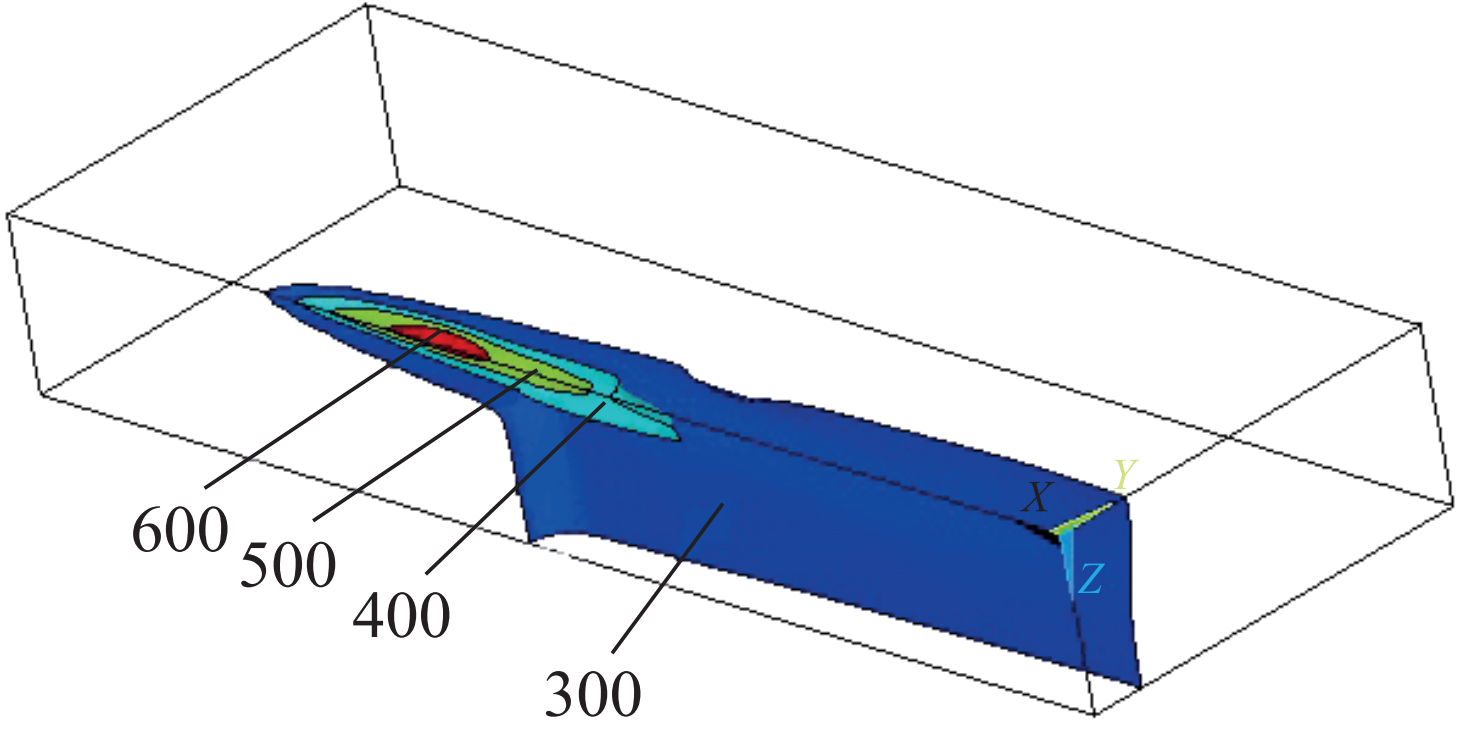

Fig. 2. Temperature distribution in the volume of the processed plate, *K*